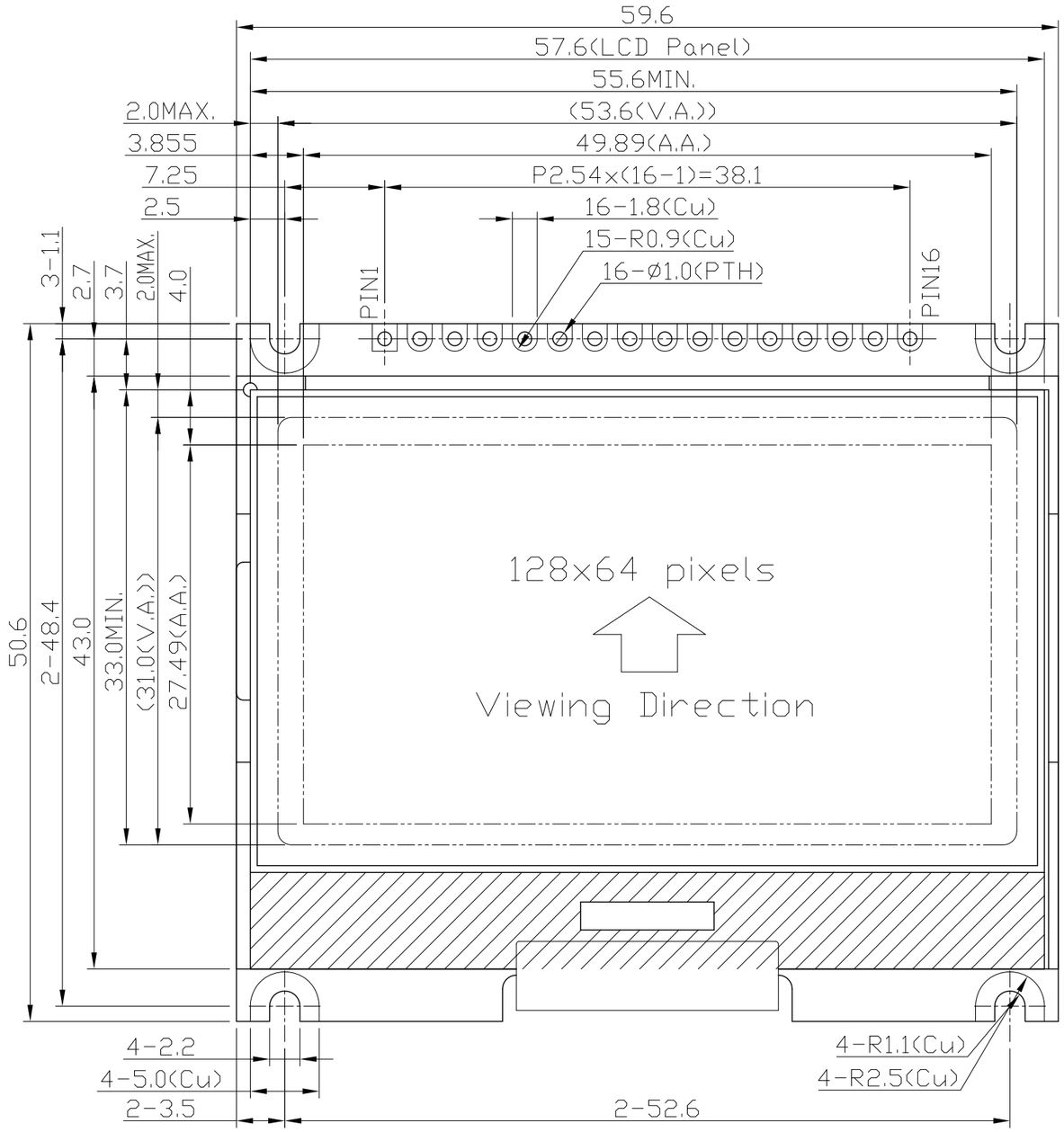

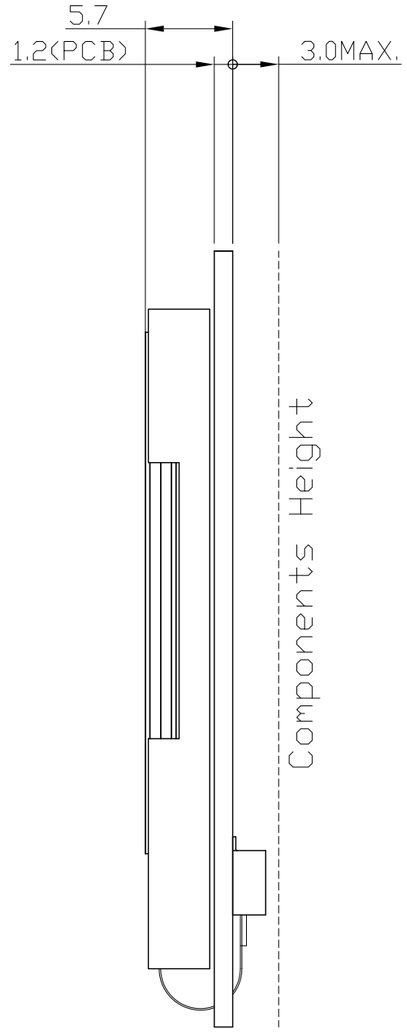

Terminal	
No.	Pin Name
1	VSS
2	VDD
3	DB7
4	DB6
5	DB5
6	DB4
7	DB3
8	DB2
9	DB1
10	DB0
11	/RD
12	/WR
13	RS
14	/RES
15	/CS1
16	BLA

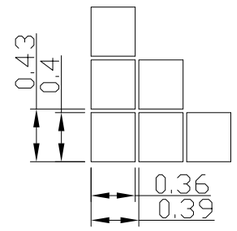

Pixels Details
Scale=20/1

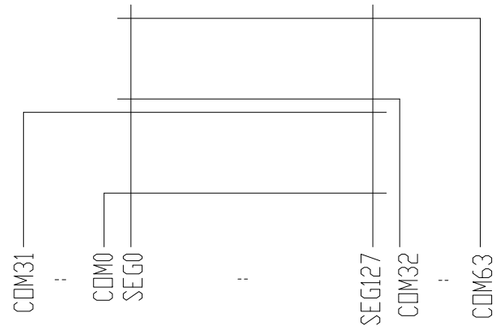

Wiring Details
Scale=free

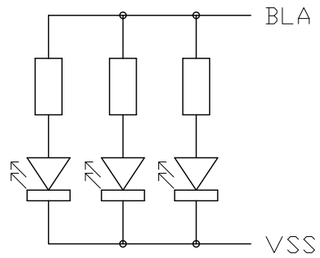

Backlight Circuit
(No. of LEDs = 3pcs)
Scale=free

Note:
*1. Display Type : FSTN, Positive, Transflective
*2. Viewing Direction : 6H
*3. Duty : 1/65, Bias : 1/9
*4. Backlight Color : White
*5. Backlight Supply : 39mA(3.3V TYP.)
*6. Operating Voltage : 3.3V
*7. Operating Temperature : -20°C~70°C
*8. Storage Temperature : -30°C~70°C
*9. Environmental Safe Standard : RoHS

Rev	Note	Date
C		
B		
A		

Dwg Title	LM6029ACW Outline Dwg			
Dwg No.	MK-002552-1-1			Date 2008-07-22
Scale 5/2	Tol. ±0.5	Unit mm	Paper Size A3	
Approved		Checked		Drawn David Yuan

TOPWAY